LED-o-copter creature.
Materials and assembly.

©makerinspiration.com

materials

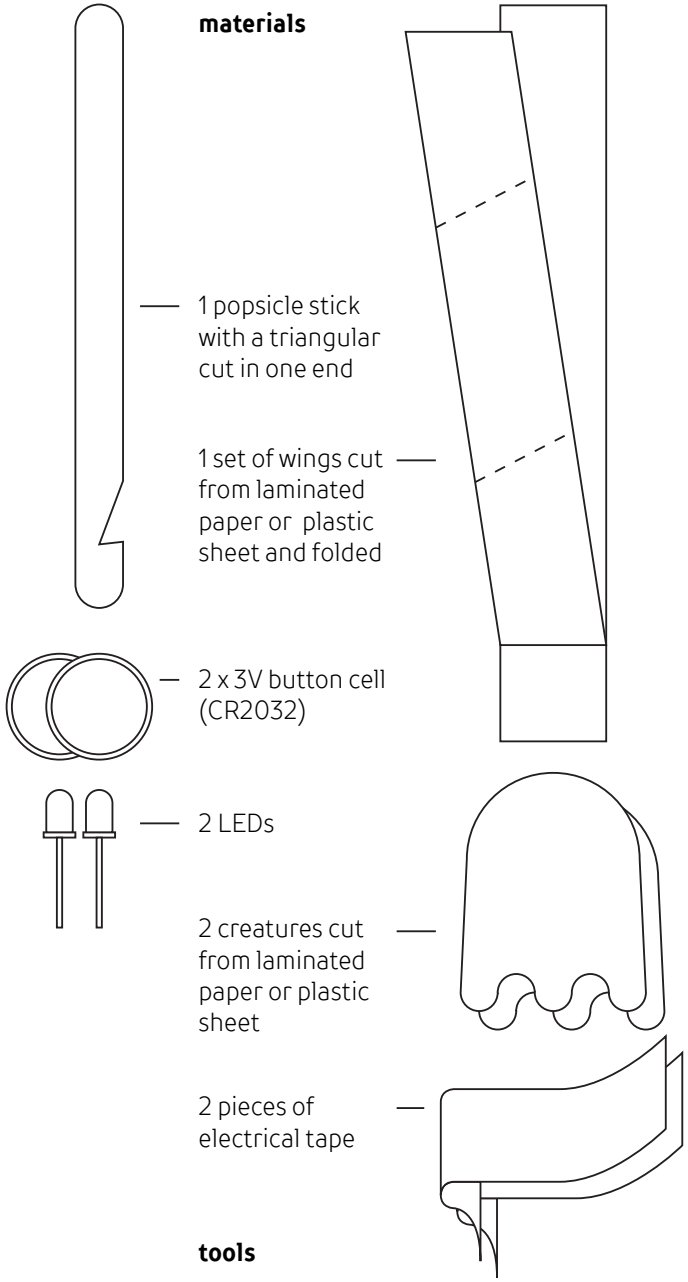

tools

X-acto knife.
Gluegun with hot glue

assembly

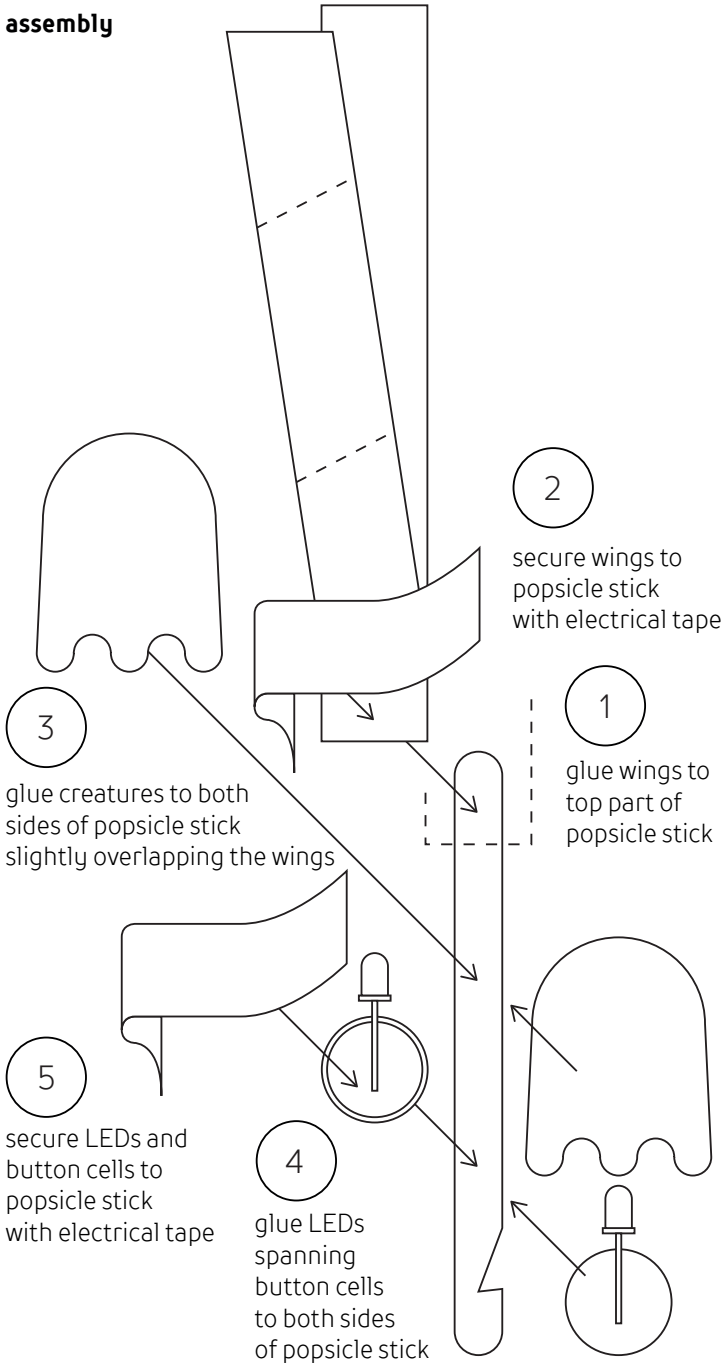
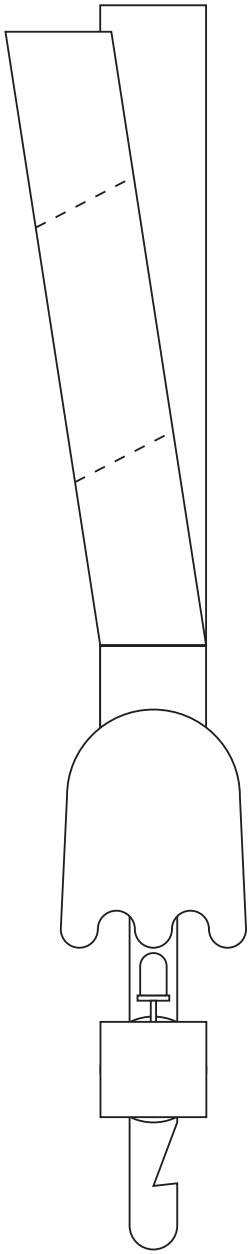
result